ARBOL DE LEVAS

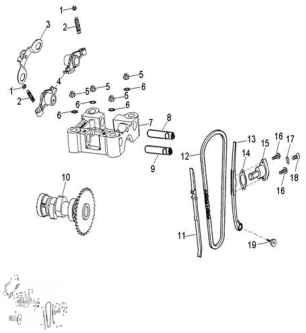

Rating: Not Rated Yet
Price:
Variant price modifier:

Base price with tax:

Price with discount:

Salesprice with discount:

Sales price:

Sales price without tax:

Discount:

Tax amount:

Ask a question about this product

Description

Ref.	Título	Código
1	TUERCA TAPON	62-90206
2		62-90012
3	UNION BA LANCINES DE LEVA	62-14456
4	BALANCIN ARBOL DE LEVA	62-14431
5	TUERCA M6 X 1,0	62-94050
6		62-94101
7	SOPORTE ARBOL DE LEVAS	62-12211

Ref.		Título	Código	
		8	EJE ADMISION ARBOL DE LEVA	62-14452
		9	EJE ESCAPE ARBOL DE LEVA	62-14453
		10	ARBOL DE LEVAS	62-14400
		11	GUIA	62-14500
		12	CADENA DE DISTRI BUCION	62-14401
		13	GUIA DERECHA CADENA	62-14550
		14	JUNTA TENSOR	62-14523
		15	TENSOR	62-14521
		16	TORNILLO M6 X 25 X 1	62-96000
		17	O-RING 34,3	62-93210
		18		62-93000
		19	GUIA PIVOT	62-14535